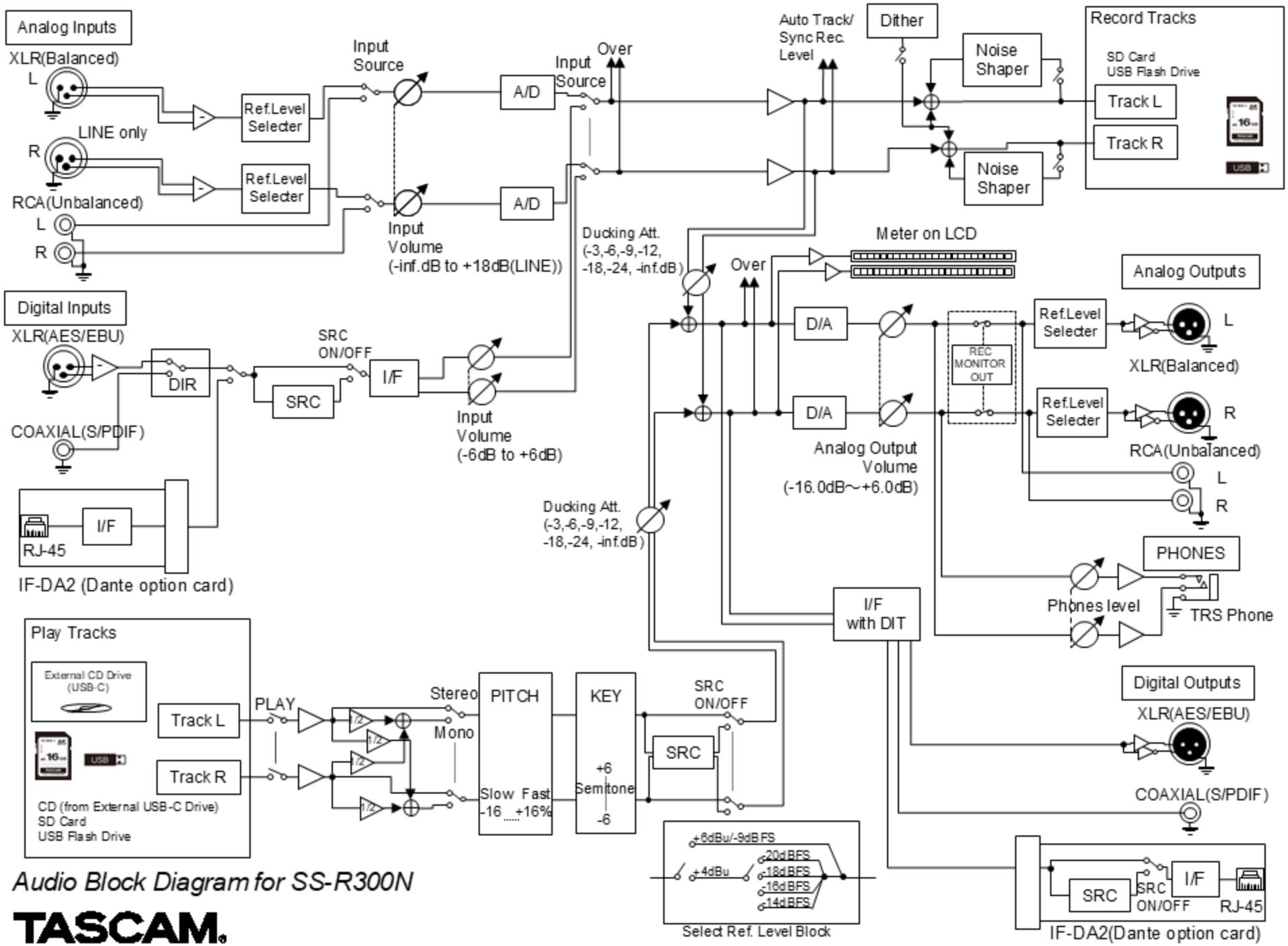

Audio Block Diagram for SS-R300N

TASCAM